Summary in Graph

# Exam Summary (GATE Overflow CS Test Series 2026 | Mix Subjects | Shallow Test 2)

| | | | |
|---|---|---|---|
| Qs. Attempted: | 0 (0 + 0) | Correct Marks: | 0 (0 + 0) |
| Correct Attempts: | 0 (0 + 0) | Penalty Marks: | 0 (0 + 0) |
| Incorrect Attempts: | 0 (0 + 0) | Resultant Marks: | 0 (0 + 0) |

| | |
|---|---|
| Total Questions: | 30 (10 + 20) |
| Total Marks: | 50 (10 + 40) |
| Exam Duration: | 90 Minutes |
| Time Taken: | 0 Minutes |

## Individual Question Statistics

Select Metric: Marks Obtained

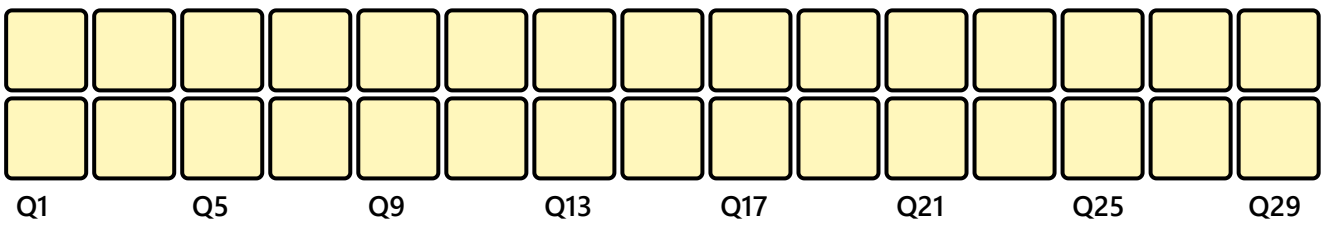


* Average Stats based on first-attempt stats of Top 10% (1) out of 12 users

EXAM RESPONSE EXAM STATS FEEDBACK

## Technical

Q #1 Multiple Choice Type Award: 1 Penalty: 0.33 Digital Logic

A 4-bit one-hot counter is constructed using a series of D flip-flops, and the outputs are connected with a distributed feedback gate (excluding the last flip-flop), where the output of the last flip-flop is inverted and fed back into the input of the first flip-flop. The resulting circuit behaves equivalently to:

A. SR flip flop
B. JK flip flop

C. T flip flop
D. Johnson counter

Your Answer: | Correct Answer: D | Not Attempted | Time taken: 00min 00sec | Discuss

Q #2 | Numerical Type | Award: 1 | Penalty: 0 | Algorithms

Consider the following array of integers:

$$12, 55, 36, 73, 91, 8, 46, 29$$

This array is sorted using the merge sort algorithm. Determine the total number of comparisons in which the element 73 is involved during the merge sort process.

Your Answer: | Correct Answer: 3:3 | Not Attempted | Time taken: 00min 00sec | Discuss

Q #3 | Multiple Select Type | Award: 1 | Penalty: 0 | Algorithms

Consider the following binary trees:
1. A binary tree where every node has exactly two children, and all leaf nodes are at the same level.
2. A binary tree where all internal nodes have two children, but the leaf nodes are not necessarily at the same level.
3. A binary tree where every node has exactly zero or two children, and the leaf nodes are all at the same level.
4. A binary tree where the root has exactly two children, and each subsequent node has one child, resulting in a skewed tree.
Which of the above binary trees is guaranteed to be a perfect binary tree? (Mark all the correct choices)

A. $1$
B. $3$
C. $2$ and $4$
D. $3$ and $4$

Your Answer: | Correct Answer: A;B | Not Attempted | Time taken: 00min 00sec | Discuss

Q #4 | Multiple Choice Type | Award: 1 | Penalty: 0.33 | Data Structures

Which of the following is being implemented by the following code snippet?

```
Struct BTnode
{
 Struct BTnode *lchild;
 int data;
 Struct Btnode *rchild;
}a;

BT(Struct BTnode *r)
{
 if(r == NULL)
 return(0);
 if(r -> lchild == NULL && r -> rchild == NULL)
 return(1);
 else
 {
  yL = BT(r -> lchild);
  yR = BT(r -> rchild);
  c = yL + yR;
  return(c);
 }
}
```

A. It finds the height of the binary tree.
B. It counts total number of internal node in binary tree.
C. It counts total number of leaf nodes in binary tree.
D. It counts total number of nodes in binary tree.

Your Answer: | Correct Answer: C | Not Attempted | Time taken: 00min 00sec | Discuss

Q #5 | Multiple Choice Type | Award: 1 | Penalty: 0.33 | Algorithms

For the following function, arr points to an array of size elements. What is the time complexity of the function? Assume the function is called with a non-empty array.

```
void reverse(int *arr, int size)
{
    if (size <= 1) return;

    int temp = arr[0];

    arr[0] = arr[size - 1];
    arr[size - 1] = temp;
    reverse(arr + 1, size - 2);
}
```

A. $O(1)$
B. $O(n \log n)$
C. $O(n)$
D. $O(n^2)$

Your Answer: | Correct Answer: C | Not Attempted | Time taken: 00min 00sec | Discuss

Q #6 | Multiple Choice Type | Award: 1 | Penalty: 0.33 | Digital Logic

Given the SR flip-flop circuit below.

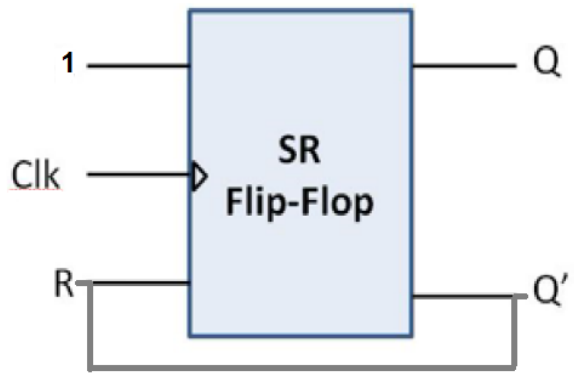


What will be the output $Q$ after the 3 clock pulses?

A. $0$

B. $1$

C. Indeterminate

D. $1, 0, 1$

Your Answer: | Correct Answer: C | Not Attempted | Time taken: 00min 00sec | Discuss

**Q #7** Numerical Type | Award: 1 | Penalty: 0 | Graph Theory

In a simple undirected graph with $12$ vertices and $9$ edges, what is the maximum number of isolated vertices that the graph can have?

Your Answer: | Correct Answer: 7:7 | Not Attempted | Time taken: 00min 00sec | Discuss

**Q #8** Multiple Choice Type | Award: 1 | Penalty: 0.33 | Algorithms

What is the worst case running time of Max-Heapify on a heap of size $n$?

A. $\Theta(n \log n)$
B. $\Theta(n^2)$
C. $\Omega(\log n)$
D. $O(n)$

Your Answer: | Correct Answer: C | Not Attempted | Time taken: 00min 00sec | Discuss

**Q #9** Multiple Choice Type | Award: 1 | Penalty: 0.33 | Digital Logic

Which logic gates are represented by the two circuits shown below?

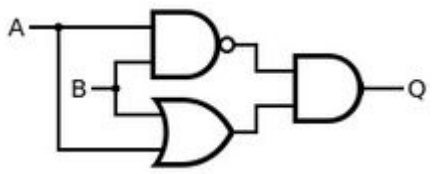


and

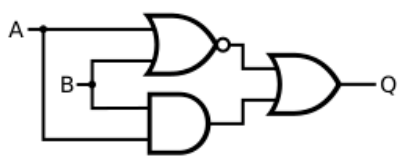


.

A. XOR and XNOR
B. NAND and NOR
C. OR and AND
D. XNOR and NOR

Your Answer: | Correct Answer: A | Not Attempted | Time taken: 00min 00sec | Discuss

**Q #10** Multiple Select Type | Award: 1 | Penalty: 0 | Digital Logic

Which of the following statements correctly describes the connection between Boolean algebra and logic circuits? (Select all that apply)

A. Boolean algebra provides a mathematical framework to simplify logic circuits.
B. Each Boolean operation directly maps to a unique logic gate, but some gates may represent more than one Boolean operation.
C. Boolean algebra is only applicable to digital circuits with memory elements.
D. Simplifying Boolean expressions using Boolean algebra can optimize the performance and cost of a logic circuit.

Your Answer: | Correct Answer: A;B;D | Not Attempted | Time taken: 00min 00sec | Discuss

**Q #11** Numerical Type | Award: 2 | Penalty: 0 | Digital Logic

Given the circuit below, for the input $0101$, the value of $Q1 + Q2 + Q3 =$__ ($+$ is the OR operation)

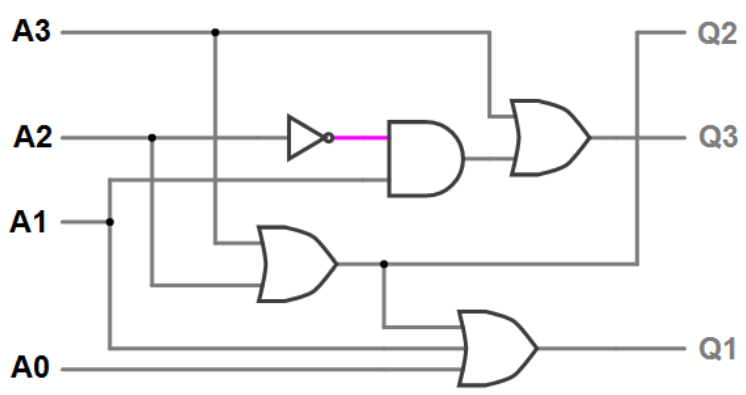


Your Answer: | Correct Answer: 1:1 | Not Attempted | Time taken: 00min 00sec | Discuss

**Q #12** Numerical Type | Award: 2 | Penalty: 0 | Programming in C

Calculate the value printed by the following C code.

```c
#include<stdio.h>
int main()
{
    int arr[5] = {5, 10, 15, 20, 25};
    int *p = arr + 2;

    int result;
    result = *(p + 1) - *(p - 1);

    printf("Result = %d", result);
}
```

Your Answer: | Correct Answer: 10:10 | Not Attempted | Time taken: 00min 00sec | Discuss

**Q #13** Numerical Type | Award: 2 | Penalty: 0 | Programming in C

Given the following C code, determine the value printed by the program after executing the pointer arithmetic and array operations.

```c
#include<stdio.h>
int main()
{
    int array[11] = {5, 10, 15, 20, 25, 30, 35, 40, 45, 50, 60};
    int *ptr = array;
    int index = 2;
printf("%d\n", *ptr + *(ptr + index) + *(ptr + 3) - *(ptr + array[1]));
    return 0;
}
```

Your Answer: | Correct Answer: -20:-20 | Not Attempted | Time taken: 00min 00sec | Discuss

**Q #14** Numerical Type | Award: 2 | Penalty: 0 | Digital Logic

In $two's$ complement representation, two $n$-bit numbers can produce a product that requires up to $2n$ bits to store. For $n = 3$, how many bits are required to represent the product of the maximum positive and minimum negative $3 - bit\ two's$ complement numbers.

Your Answer: | Correct Answer: 5:5 | Not Attempted | Time taken: 00min 00sec | Discuss

**Q #15** Numerical Type | Award: 2 | Penalty: 0 | Digital Logic

Consider a Boolean function of four variables $A, B, C, D$. How many of these functions depend on at least three of the four variables?

Your Answer: | Correct Answer: 65466:65466 | Not Attempted | Time taken: 00min 00sec | Discuss

**Q #16** Numerical Type | Award: 2 | Penalty: 0 | Digital Logic

You are given a clock signal with a frequency that needs to be divided by $4096$. If you use $mod - 16$ counters, and each counter operates independently in parallel, how many such counters are required to achieve the desired frequency division?

Your Answer: | Correct Answer: 3:3 | Not Attempted | Time taken: 00min 00sec | Discuss

**Q #17** Multiple Choice Type | Award: 2 | Penalty: 0.67 | Digital Logic

In a Gated D latch made by using NAND gates and a NOT gate, the $D$ input is set to $1$ while the enable (EN) input is active (high), and then the enable input is set to $0$ after the output stabilizes. This will result in the output:

A. No change
B. $Q = 1, Q' = 0$
C. $Q = 0, Q' = 1$
D. Indeterminate state

Your Answer: | Correct Answer: B | Not Attempted | Time taken: 00min 00sec | Discuss

**Q #18** Numerical Type | Award: 2 | Penalty: 0 | Digital Logic

A Johnson counter with 6 flip-flops is cascaded with another Johnson counter with 4 flip-flops. The resulting counter is a Mod-$C$ counter. If the value of $4 \times C + 5 \times Q$ is required, where $C$ is the modulus of the resulting counter and $Q$ is the total number of flip-flops used, calculate the value of $4 \times C + 5 \times Q$.

Your Answer: | Correct Answer: 434:434 | Not Attempted | Time taken: 00min 00sec | Discuss

**Q #19** Multiple Choice Type | Award: 2 | Penalty: 0.67 | Digital Logic

Given the sequential circuit shown below, with an initial output value of $Q_1Q_0 = 00$, determine the next four values of the output $Q_1Q_0$.

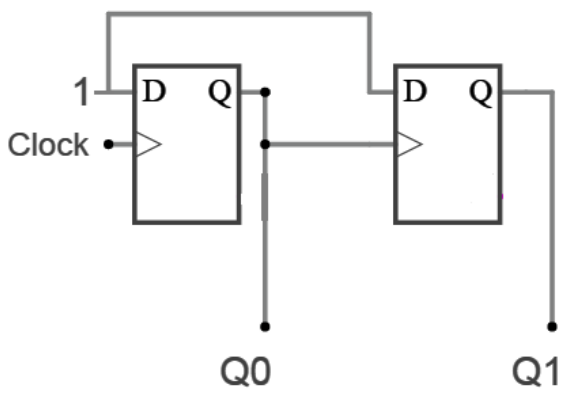


A. $00, 11, 11, 11$
B. $10, 11, 01, 00$
C. $10, 00, 01, 11$
D. $11, 11, 11, 11$

Your Answer: | Correct Answer: D | Not Attempted | Time taken: 00min 00sec | Discuss

**Q #20** Numerical Type | Award: 2 | Penalty: 0 | Digital Logic

Consider an $8 - bit$ up-counter. If the current value of the counter is $10010101$ and the counter needs to be changed to $00010101$, determine the number of clock pulses required to make this transition.

Your Answer: | Correct Answer: 128:128 | Not Attempted | Time taken: 00min 00sec | Discuss

**Q #21** Multiple Choice Type | Award: 2 | Penalty: 0.67 | Digital Logic

Consider a $4 - bit$ straight ring counter with an initial decimal value of $1$. How many states will it take for the $4 - bit$ straight ring counter to return to its initial state, starting from the initial state of $1$?

A. 4
B. 5
C. 6
D. 7

Your Answer: | Correct Answer: A | Not Attempted | Time taken: 00min 00sec | Discuss

**Q #22** Numerical Type | Award: 2 | Penalty: 0 | Digital Logic

If an $8-to-3$ line encoder were to be constructed using only $2-to-4$ line decoders, how many decoders would be needed assuming no other logic gates are used?

Your Answer: | Correct Answer: 3:3 | Not Attempted | Time taken: 00min 00sec | Discuss

**Q #23** Numerical Type | Award: 2 | Penalty: 0 | Digital Logic

Consider two Boolean functions: 1. $f_1 = P \cdot (A+B)$, where $P = \overline{C} + \overline{D}$ 2. $f_2 = (\overline{A}+B)\cdot(A+\overline{B})$ Let $R$ represent the minimum number of two-input NAND gates required to implement $f_1$, and let $S$ represent the minimum number of two-input NAND gates required to implement $f_2$. Calculate the sum $R+S$.

Your Answer: | Correct Answer: 11:11 | Not Attempted | Time taken: 00min 00sec | Discuss

**Q #24** Multiple Choice Type | Award: 2 | Penalty: 0.67 | Digital Logic

The circuit below demonstrates the implementation of a two-input AND gate using two $2-to-1$ multiplexers.

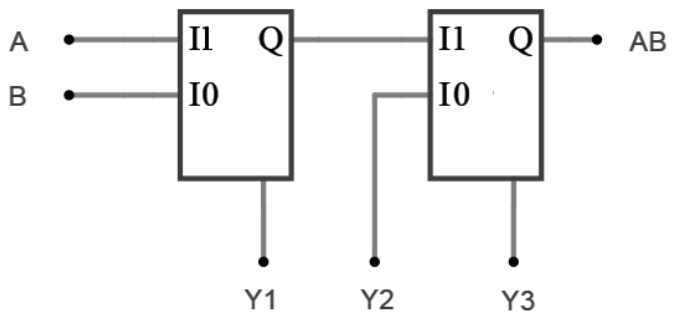


What are the values of $Y_1, Y_2$ and $Y_3$?

A. $Y_1 = B, Y_2 = 1, Y_3 = 1$
B. $Y_1 = A, Y_2 = 0, Y_3 = A$
C. $Y_1 = A, Y_2 = B, Y_3 = 1$
D. $Y_1 = B, Y_2 = 0, Y_3 = 0$

Your Answer: | Correct Answer: A | Not Attempted | Time taken: 00min 01sec | Discuss

**Q #25** Numerical Type | Award: 2 | Penalty: 0 | Data Structures

What is the minimum height of a binary search tree (BST) that can be constructed using $15$ distinct nodes, assuming the height of the tree is measured from the root (at height $0$)?

Your Answer: | Correct Answer: 3:3 | Not Attempted | Time taken: 00min 00sec | Discuss

**Q #26** Numerical Type | Award: 2 | Penalty: 0 | Data Structures

How many structurally different binary trees can be formed using 7 distinct nodes, assuming no elements are repeated?

Your Answer: | Correct Answer: 429:429 | Not Attempted | Time taken: 00min 00sec | Discuss

Q #27 | Multiple Select Type | Award: 2 | Penalty: 0 | Digital Logic

Consider the IEEE-$754$ floating-point standard for single and double precision formats. Which of the following statements about the representational characteristics are correct? (Select all that apply)

A. The IEEE-$754$ single precision format can represent a smaller range of values compared to its double precision counterpart, considering the number of bits available for the exponent.
B. In IEEE-$754$ floating-point representation, the exponent bias for single precision is $127$, while for double precision, the bias is $1023$.
C. IEEE-$754$ floating-point standard uses a rounding mode to handle cases where the result of a floating-point operation does not exactly represent the correct result, such as rounding to the nearest even number.
D. In the IEEE-$754$ standard, subnormal numbers (denormals) are always represented with an exponent of $0$ and a non-zero mantissa, which allows the representation of numbers closer to zero than normalized numbers.

Your Answer: | Correct Answer: A;B;C;D | Not Attempted | Time taken: 00min 00sec | Discuss

Q #28 | Numerical Type | Award: 2 | Penalty: 0 | CO & Architecture

A device connected to a CPU has a data transfer rate of $50$ KB/sec. In program-controlled mode, the CPU transfers data byte-by-byte with an overhead of $10$ microseconds per byte. In interrupt-driven mode, the interrupt overhead is $8$ microseconds, and the CPU only handles the interrupt once every $100$ bytes transferred. Assuming the byte transfer time between the device interface register and CPU is negligible, calculate the minimum performance gain of operating the device in interrupt-driven mode over program-controlled mode.

Your Answer: | Correct Answer: 125:125 | Not Attempted | Time taken: 00min 00sec | Discuss

Q #29 | Numerical Type | Award: 2 | Penalty: 0 | CO & Architecture

Consider a MIPS processor with a $6 - stage$ pipeline, where the following conditions hold:

- For a non-pipelined processor, the cycle times for ALU operations and branches are $4$ cycles, while memory operations take $6$ cycles. The processor operates at a clock frequency of $2.5$ GHz.
- The relative proportions of ALU operations, branch instructions, and memory operations in the workload are $60\%$, $10\%$, and $30\%$, respectively.
- In the pipelined version, due to factors such as clock skew and setup time, the clock cycle time increases by $0.75$ ns.

Determine the estimated speedup achieved by using the pipelined architecture compared to the non-pipelined implementation. Round your answer to two decimal places.

Your Answer: | Correct Answer: 1.60:1.60 | Not Attempted | Time taken: 00min 00sec | Discuss

Q #30 | Numerical Type | Award: 2 | Penalty: 0 | CO & Architecture

Consider a RISC processor that performs arithmetic operations between registers, where each instruction follows the format:

$$R_1 \leftarrow R_2 \text{ op } R_3$$

The processor's pipeline operates at a clock speed of $2.5$ GHz, and the instruction pipeline consists of the following stages:

- Instruction Fetch (IF): $2$ clock cycle
- Instruction Decode (ID): $3$ clock cycles
- Operand Fetch (OF): $2$ clock cycle
- Execution (EX): $4$ clock cycles
- Store Results (WR): $3$ clock cycles

Assuming there are no data dependencies between consecutive instructions, what is the maximum rate of execution (in MIPS) for these register-register operations?

**Your Answer:** | **Correct Answer: 625:625** | **Not Attempted** | **Time taken: 00min 00sec** | **Discuss**

Copyright & Stuff